CALCULATING ANGLES

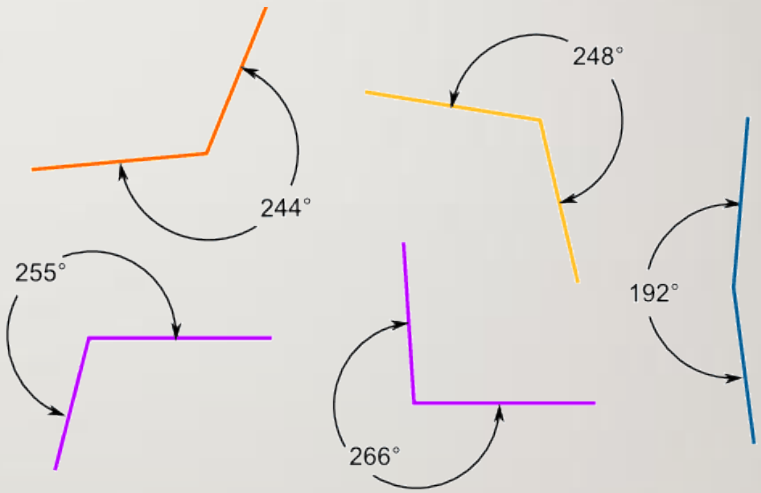

TODAY WE WILL:

- Find missing angles between intersecting lines.
- Find missing angles in triangles
- Find missing angles in quadrilaterals.

MISSING ANGLES ON A STRAIGHT LINE

- Remember:
  - Angles on a straight line add up to 180°
  - To calculate a missing angle on a straight line, take away the known angle from 180°
  - Eg:

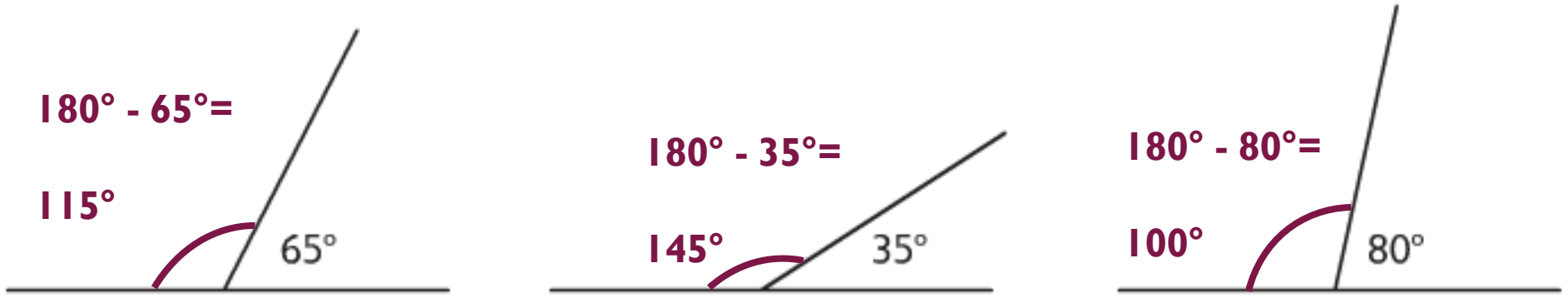

MISSING ANGLES IN A FULL TURN

- Remember:
  - Angles in a full turn add up to 360°
  - To calculate a missing angle in a full turn, take away the known angle from 360°
  - Eg:

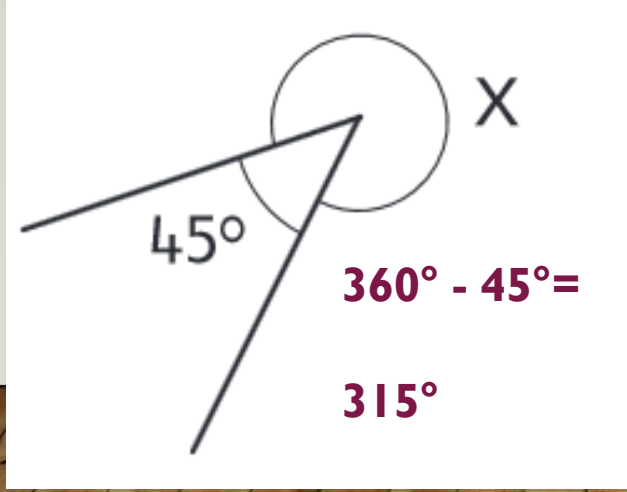

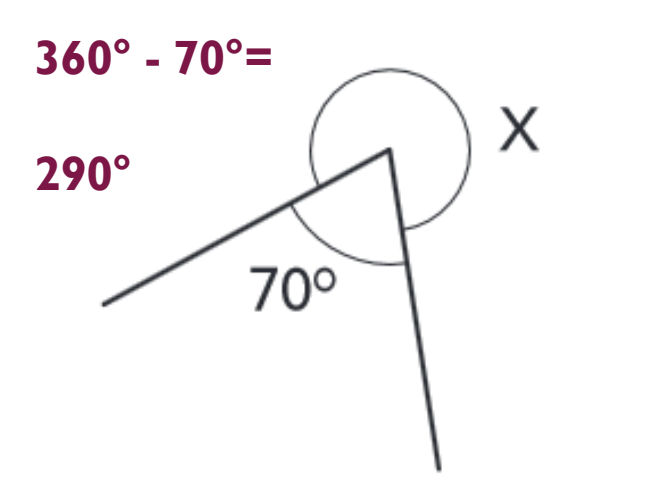

MISSING ANGLES ON INTERSECTING LINES

- Remember:
- All 4 angles will add up to 360°
- Opposite angles on a cross are equal
- Eg:

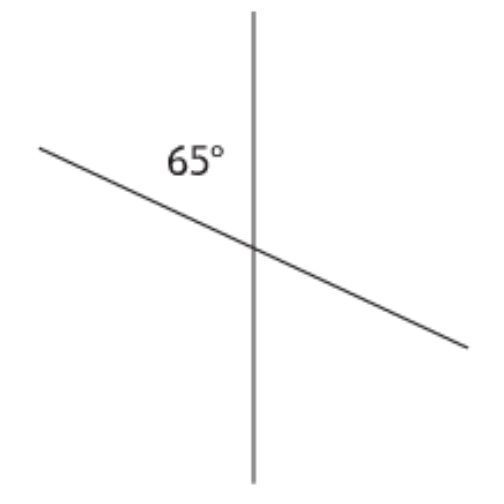

Step 1: Opposite angle is equal

Step 2: 65° + 65° = 130°
360° - 130° = 230°

Step 3: 230° ÷ 2 = 115°

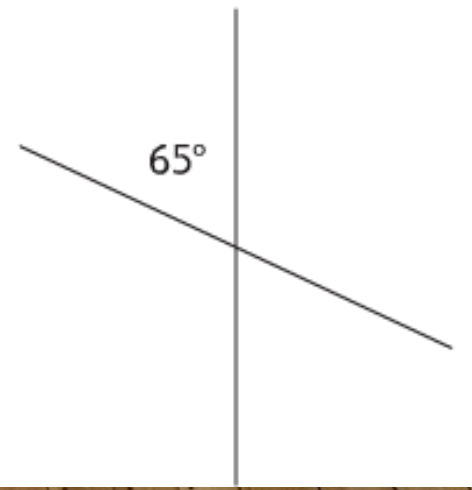

MISSING ANGLES WITHIN TURNS

Straight lines	Full turns	Intersecting lines
• 180° - known angles	• 360° - known angles	• Opposite angles are equal

You should now be able to complete questions 1-6 without a protractor.

MISSING ANGLES IN TRIANGLES

- Remember
  - All angles in a triangle add up to 180°
  - To find the missing angle, add the known angles and subtract from 180°

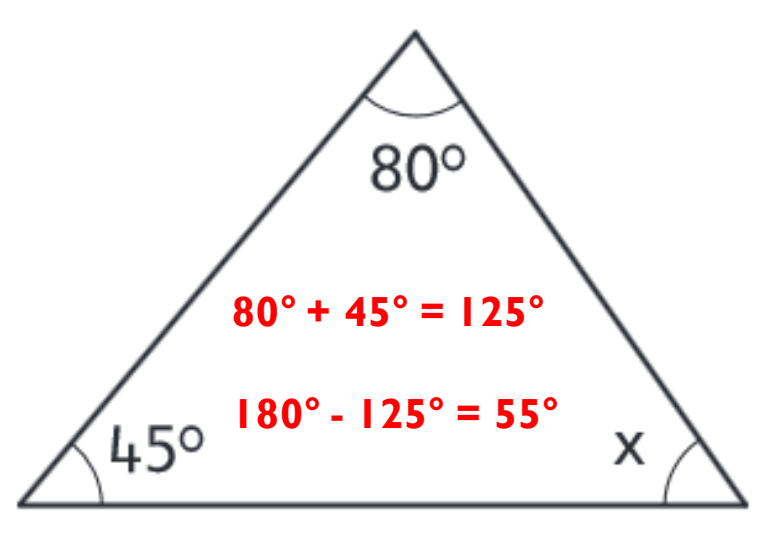

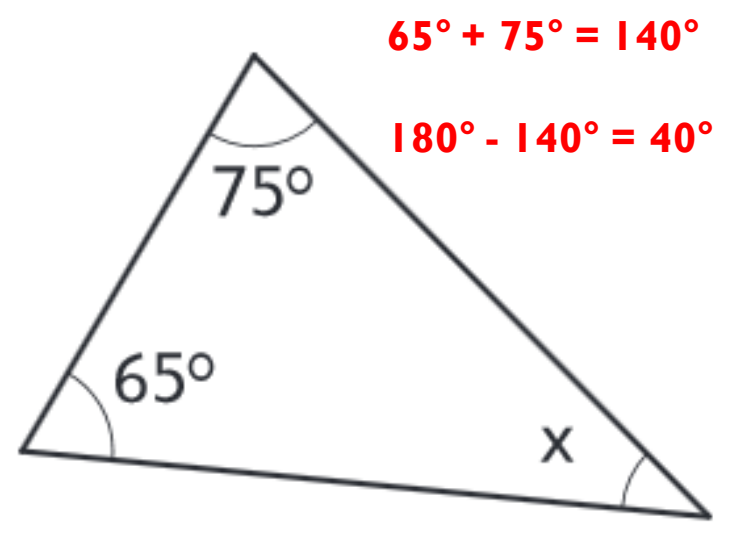

MISSING ANGLES IN QUADRILATERALS

- Remember
  - A quadrilateral is any shape with 4 straight sides
    - E.g. square, rhombus, rectangle, trapezium, parallelogram
  - The angles in a quadrilateral add up to 360°

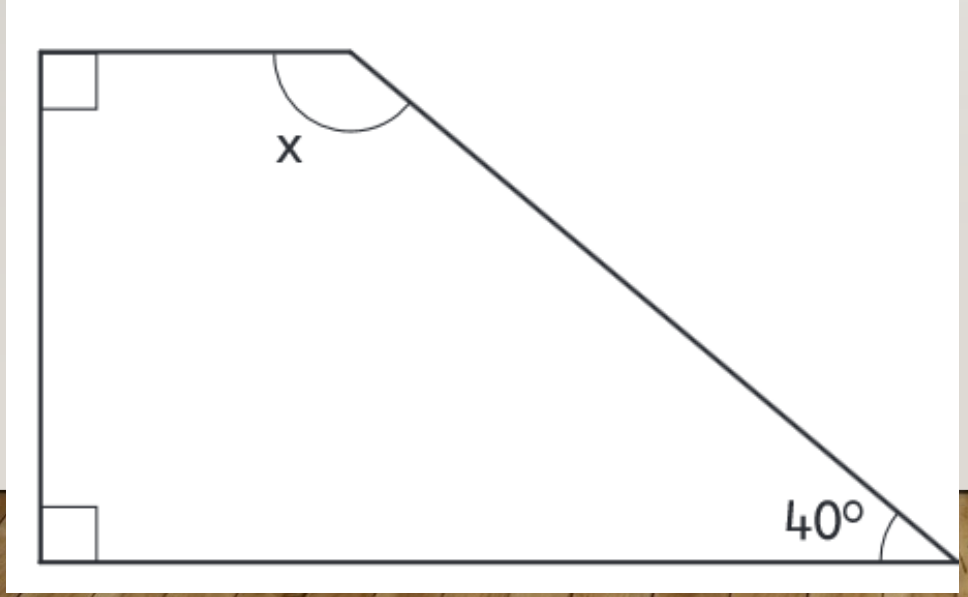

90° + 90° + 40° = 220°

360° - 220° = 140°

CALCULATING MISSING ANGLES

180°

- Angles on a straight line add up to 180°
- Angles in a triangle add up to 180°

360°

- Angles in a full turn add up to 360°
- Angles in a quadrilateral add up to 360°

Intersecting Lines

- Opposite angles are equal
- The angles add up to 360°

You should now be able to complete all questions.